TECHMIZE by TONGHUI

OM

OPERATION MANUAL

TH283X Series

Compact Digital LCR Meters — TH2830 / TH2832 / TH2832D. Covers front-panel operation, measurement setup and system configuration; see Chapter 8 for the full remote-command set.

Techmize Electronic GmbH · Ismaning, Germany

Rev. 2026-09

TH283X Series Operation Manual

Compact Digital LCR Meters — TH2830 / TH2832 / TH2832D

This manual covers the TH283X Series compact digital LCR meters — models **TH2830**, **TH2832** and **TH2832D**. Part I describes front-panel operation, measurement setup and system configuration; Part II covers the remote command set and the optional HANDLER interface for automated test systems.

Part I — Operation	
1. Safety & Compliance	3 pages
2. Out of the Box	1 page
3. Getting to Know the Instrument	3 pages
4. [DISP] / [SETUP] Menu Details	11 pages
5. System Setup & File Management	2 pages
6. Measurement Examples	3 pages
7. Performance & Specifications	8 pages
Part II — Remote Control & Handler	
8. Remote Command Reference	10 pages
9. Handler Interface (Optional)	9 pages
Appendix — Terms, Symbols & Quick Reference	2 pages

CHAPTER 1

Safety & Compliance

1.1 About this manual

This is the original-language (English) edition of the operation manual for the Techmize TH283X series of compact digital LCR meters, covering models **TH2830**, **TH2832** and **TH2832D**. Where this manual and the instrument itself appear to disagree, or where a described function is not present on your particular model, contact Techmize or your authorized distributor using the details in §1.10 before relying on the instrument for measurement decisions.

Techmize continually improves the performance, features and construction of its instruments; content, specifications and accessories described here are subject to change without notice. This manual does not necessarily describe every optional accessory or every firmware revision.

1.2 Safety symbols used in this manual

The following symbols and signal words appear in this manual and on the instrument itself:

WARNING — a hazard that, if not avoided, could result in personal injury or death.

CAUTION — a hazard that, if not avoided, could damage the instrument or the device under test, or invalidate a measurement.

NOTE — supplementary information that helps with correct or efficient use, but is not itself a hazard.

Protective ground — this terminal must be connected to protective earth. Also printed on the instrument chassis ground terminal.

1.3 General safety requirements

The TH283X series is a **Protection Class I** instrument: protective earthing of the chassis, via the power cord or the rear-panel ground terminal, is essential to safety and must not be defeated.

> **WARNING — ELECTRIC SHOCK**
>
> Always use a supply outlet with a protective earth contact. Never connect the AC supply, or operate the instrument, with the protective ground disconnected or with a two-wire (ungrounded) adapter. Disconnect the power supply before replacing the fuse or opening the case.

Before switching on, confirm the fuse fitted on the rear panel matches your local supply. TH2830 and TH2832 operate from **198–242 V AC, 47–63 Hz**; TH2832D is powered from an external **24 V DC (+10%)** supply and has no internal AC fuse.

> **CAUTION**
>
> TH2830/TH2832 use a **2 A, fast-blow, 250 V** fuse (F2A/250V); two spares ship with the instrument (§2.1). Use only this rating and type when replacing the fuse, and do not bend or distort the fuse-holder contacts.

Environment. Operate the instrument indoors, at 0–40 °C and ≤75% relative humidity, away from strong vibration, dust, direct sunlight and corrosive gases, and keep the side and rear ventilation openings clear. For storage, keep the instrument in its original packaging at 5–40 °C and <85% relative humidity. Keep the instrument and its test leads away from strong electromagnetic fields, which can affect both safety and measurement accuracy.

Test fixtures and cables. Use only test fixtures and cables supplied or approved by Techmize/Tonghui for this instrument. Unapproved cables can produce misleading measurement results and, in some configurations, compromise safety.

> **WARNING — DISCHARGE THE DUT**
>
> Discharge polarised or capacitive devices under test before connecting them to the UNKNOWN terminals. Connecting a charged component can damage the instrument and may present a shock hazard.

Warm-up. Allow at least **15 minutes** of warm-up after switch-on for general use. For measurements relying on the instrument's rated accuracy, allow at least **30 minutes** (§7.1). Frequent, unnecessary power-cycling should be avoided, as it also affects measurement stability.

1.4 Electrical safety test data

Test	Requirement
Insulation resistance	≥ 50 MΩ between mains and chassis under normal conditions; ≥ 2 MΩ under high-humidity conditions
Dielectric strength	Withstands 1.5 kV AC, 50 Hz, for 1 minute between mains and chassis, with no breakdown or flashover
Leakage current	≤ 3.5 mA AC (rms)

1.5 Low Voltage & EMC compliance

The TH283X series is designed and tested to meet the essential requirements of the following EU directives:

Directive	Harmonised standard(s)
Low Voltage Directive 2014/35/EU	EN 61010-1:2010+A1:2019
EMC Directive 2014/30/EU	EN IEC 61326-1:2021; CISPR 11:2015+A1:2016+A2:2019 (Group 1, Class A); EN 61000-4-2:2009, EN 61000-4-3:2020, EN 61000-4-4:2012, EN 61000-4-5:2014+A1:2017, EN 61000-4-6:2014, EN 61000-4-11:2020; EN IEC 61000-3-2:2019+A1:2021+A2:2024, EN 61000-3-3:2013+A1:2019+A2:2021

> **NOTE**
>
> As a Class A / Group 1 ISM-adjacent instrument, the TH283X series is intended for industrial/laboratory environments; it may not provide adequate protection against radio interference in a residential setting.

The CE mark on the rear-panel nameplate indicates conformity with the directives above. A full EU Declaration of Conformity is available from Techmize on request (see §1.10).

1.6 WEEE — disposal of electrical and electronic equipment



This symbol indicates that the instrument must not be disposed of as unsorted municipal waste at the end of its service life. Within the European Union, return the instrument to Techmize, your distributor, or a designated collection point for electrical and electronic equipment, in accordance with the WEEE Directive (2012/19/EU) and its national transposition in your country. Correct disposal helps prevent potential harm to the environment and human health from uncontrolled waste handling.

1.7 RoHS compliance

The TH283X series is designed to comply with Directive 2011/65/EU (RoHS), as amended, restricting the use of certain hazardous substances in electrical and electronic equipment. Supporting documentation is available from Techmize on request.

1.8 Warranty

Techmize warrants this instrument to be free from defects in material and workmanship for a period of **two (2) years** from the date of delivery to the original purchaser. During the warranty period, Techmize will repair or replace, at its discretion, a product that proves defective, provided it has been used within the specified operating conditions.

This warranty does not cover: damage from misuse, accident, unauthorized modification or repair; consumable/wear items such as fuses and connectors; or damage from operation outside the environmental limits given in §1.3. Standard test fixtures and cables are covered by their own applicable warranty terms.

1.9 Limitation of liability

Except as expressly stated in §1.8, Techmize makes no other warranty, express or implied, regarding this instrument or its documentation. Techmize is not liable for indirect, incidental or consequential damages arising from the use of this instrument, to the extent permitted by applicable law.

1.10 Manufacturer & EU contact

Techmize Electronic GmbH

Office 125–126, Regus
Carl-Zeiss-Ring 15a, 85737 Ismaning,
Germany
An international subsidiary of Changzhou
Tonghui Electronic Co., Ltd. (China)

Contact

Mobile: +49 171 4981898
Email: sales@techmize-instruments.eu
Web: www.techmize-instruments.eu

Registration

Managing Director: Haohua Zhao
Register Court: Amtsgericht München
HRB 312530 · VAT ID DE463170824

CHAPTER 2

Out of the Box

2.1 Unpacking

Check the contents of the shipping carton against the packing list below before use. If the carton or its contents show signs of transport damage, do not power on the instrument — contact your carrier and your Techmize distributor before proceeding. If anything is missing, contact your Techmize distributor.

1× TH283X-series LCR meter (model as ordered: TH2830 / TH2832 / TH2832D) · 1× 3-wire power cable · 2× 2 A/250 V fast-blow spare fuse (TH2830/TH2832 only) · 1× this operation manual · 1× test report · 1× warranty certificate.

Keep the original packaging: it is the recommended way to store or return the instrument, and storage outside this packaging should still meet the environmental limits given in §1.3.

2.2 Connecting the power supply

Item	TH2830 / TH2832	TH2832D
Supply	198–242 V AC, 47–63 Hz	24 V DC (+10%)
Power consumption	≤ 80 VA	≤ 24 VA

Match the phase (L), neutral (N) and protective-earth (E) leads of the supply cable to the instrument's power inlet, and confirm the fuse fitted matches this rating as described in §1.3 before connecting. If mains conditions are noisy, fitting a power-line filter ahead of the instrument is recommended.

> NOTE
> TH283X series instruments use a software-controlled power switch rather than a traditional hard mechanical cutoff. To fully remove power, disconnect the supply cable (or the 24 V DC input on TH2832D) at the rear panel.

2.3 Connecting a test fixture

Use only a test fixture or test cable supplied or approved by Techmize/Tonghui for this instrument; a third-party or user-made fixture can produce incorrect measurement results (see also §1.3). Connect the fixture or cable to the four front-panel terminals — **Hcur, Hpot, Lpot, Lcur** — and keep both the fixture contacts and the DUT's leads clean to ensure good electrical contact. If the DUT has a shielding shell, connect the shield to the instrument's ground terminal "⏚".

2.4 Starting the instrument for the first time

1. Connect the power cable (or, on TH2832D, the 24 V DC supply) at the rear panel.
2. Press the [POWER] switch at the front-left of the instrument.
3. A splash screen shows the company logo, instrument model and firmware version while the instrument loads, then the display opens on the <Measurement Display> page (§3.3, §4.1).

Allow at least 15 minutes of warm-up for general use; allow at least 30 minutes before relying on the rated accuracy (§7.1). For an overview of the front panel, rear panel and basic navigation, continue to Chapter 3.

CHAPTER 3

Getting to Know the Instrument

3.1 Front panel

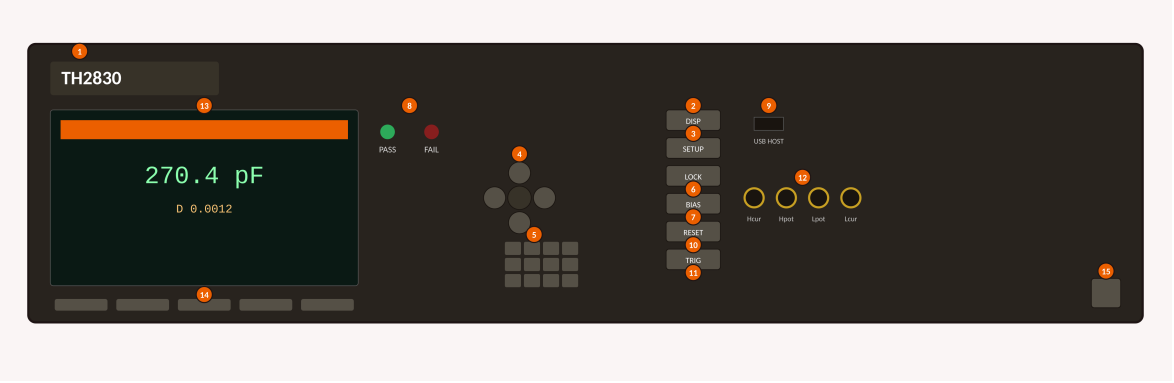

1 **Trademark & model** — instrument brand and model designation (TH2830 / TH2832 / TH2832D).

2 **DISP** — opens the measurement display pages (§3.4).

3 **SETUP** — alternates between the measurement setup pages and the system setup page (§3.4).

4 **Cursor keys** (MENU) — move the cursor between fields on screen; the active field is highlighted. Press and hold ▼ to jump directly to another region of the page.

5 **Numeric keypad** (ENTRY) — digits, decimal point and **+/−**, which toggles sign or, once a value has been started, acts as backspace. Holding the decimal-point key is a screen-capture shortcut (saved to a connected USB drive).

6 **LOCK** — locks/unlocks the front-panel keys. If a system password is set (§5.1.5), unlocking requires it.

7 **BIAS** — enables/disables the DC bias output. Not fitted on TH2830 (no internal DC bias source); inactive while measuring DCR, Lp-Rd or Ls-Rd.

8 **PASS / FAIL LEDs** — show the comparator (bin-sorting) result for the current reading.

9 **USB HOST port** — for a USB flash drive: save/recall setup files, screen captures and logged measurement data (§5.2).

10 **RESET** — stops an automatic transformer sweep in progress; has no effect on other pages.

11 **TRIG** — manually triggers a reading when the trigger mode is set to MAN (§4.5.1).

12 **UNKNOWN terminals** — four independent test connections: **Hcur** (current-source high), **Hpot** (voltage-sense high), **Lpot** (voltage-sense low), **Lcur** (current-source low). This naming is used consistently throughout this manual.

13 **LCD display** — 480×272 colour TFT; shows the reading, test conditions and instrument status (§3.3).

14 **Softkeys** — five context-sensitive keys; each key's current function is shown on screen directly above it.

15 **POWER switch.**

3.2 Rear panel



1 **GPIB** (IEEE-488) interface — *optional*. Present only when the GPIB option is fitted; see the note below.

2 **HANDLER** interface — outputs the bin/sorting result to automatic handling equipment (Chapter 9). Standard on TH2830/TH2832; optional on TH2832D.

3 **RS-232C** interface — PC communication; standard on all models.

4 **USB DEVICE** port — PC communication (USBTMC/USBCDC); standard on all models.

5 **TRIGGER** input — connect a foot switch or other external trigger source. Standard on TH2830/TH2832; optional on TH2832D.

6 **Power inlet** — IEC AC inlet with integrated fuse holder on TH2830/TH2832; 24 V DC terminal block on TH2832D.

7 **Chassis ground terminal** — for protective or shield grounding (§1.3).

8 **Rating label** — production date, serial number, manufacturer information.

> **NOTE — GPIB ADDRESS**
>
> The *GPIB ADDR* field on the <System Setup> page (§5.1.7, reserved function) only has an effect when the optional GPIB interface is fitted. On an instrument without the GPIB option, this field has no function and can be ignored.

3.3 Display zones

The 480×272 colour TFT display is divided into three zones, common to every page reached from DISP or SETUP:

Zone	Contents
Page-title zone	The name of the current page (e.g. "<MEAS DISPLAY>"), shown as a highlighted bar across the top of the screen.
Result / condition zone	The measurement reading(s) in large digits, together with the active test conditions (function, range, frequency, level, speed, bias) and status indicators (source monitor Vm/Im, correction status).
Softkey zone	The current function of each of the five softkeys, shown directly above the corresponding key; the labels change with the page and with cursor position.

3.4 Main menu keys and pages

Key	Opens
DISP	<Measurement Display> · <Bin No. Display> · <Bin Count Display> · <List Sweep Display>
SETUP (1st press)	<Measure Setup> · <Correction> · <Limit Table> · <List Sweep Setup> · <File Manage> · Tools
SETUP (2nd press)	<System Setup> page

3.5 Basic operation

1. Use DISP / SETUP and the softkeys to reach the page you want.
2. Use the cursor keys to move to the field you want to change; the active field is highlighted.
3. Use the softkeys, numeric keypad and +/– to enter or select a value; a units softkey (e.g. Hz / kHz / MHz) usually confirms and completes entry.

3.6 Starting the instrument

TH2830 and TH2832: connect the power cable and confirm the fuse fitted on the rear panel matches your local supply (§1.3). TH2832D: connect the external 24 V DC (+10%) supply instead — this model has no internal AC fuse to check. Press POWER. The splash screen shows the model, firmware version and company logo while the instrument loads, then opens on the <Measurement Display> page. Allow at least 15 minutes of warm-up for general use; allow at least 30 minutes before relying on the rated accuracy (§7.1).

CHAPTER 4

[DISP] / [SETUP] Menu Details

This chapter documents every field on the pages reached from the front-panel DISP and SETUP keys (see the menu map in §3.4). System-level setup and file management are covered separately in Chapter 5.

4.1 <Measurement Display>

Reached by pressing DISP. Six fields are set directly on this page: **FUNC, FREQ, LEVEL, RANGE, BIAS, SPEED.** Vm/Im (signal monitor) and CORR (correction status) are shown read-only here and set elsewhere (§4.5, §4.6).

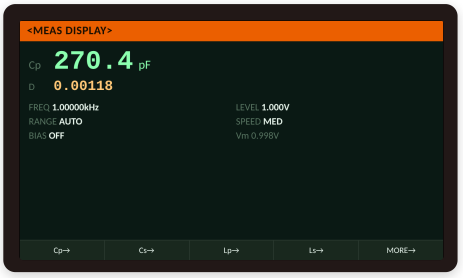

<MEAS DISPLAY> page

4.1.1 Test function (FUNC)

Primary parameters — **|Z|, |Y|, L, C, R, G, DCR**; secondary parameters — **D, Q, Rs, Rp, Rd, X, B, θ**. Soft keys navigate a menu tree (Cp→, Cs→, Lp→, Ls→, MORE→); the full set of primary-secondary combinations is:

Primary	Available combinations
Cp	Cp-D · Cp-Q · Cp-G · Cp-Rp
Cs	Cs-D · Cs-Q · Cs-Rs
Lp	Lp-Q · Lp-D · Lp-G · Lp-Rp · Lp-Rd
Ls	Ls-D · Ls-Q · Ls-Rs · Ls-Rd
Z	Z-θ° · Z-θr
Y	Y-θ° · Y-θr
R	R-X · Rp-Q · Rs-Q
G / DCR	G-B (direct, no secondary submenu) · DCR (no secondary parameter)

4.1.2 Test range (RANGE)

Soft keys: **AUTO** (auto-range), **HOLD** (lock current range), **DECR−** / **INCR+** (step the held range up/down).

Mode	Range steps
AC (LCRZ) — 10 ranges	3Ω · 10Ω · 30Ω · 100Ω · 300Ω · 1kΩ · 3kΩ · 10kΩ · 30kΩ · 100kΩ
DCR — 11 ranges	1Ω · 3Ω · 10Ω · 30Ω · 100Ω · 300Ω · 1kΩ · 3kΩ · 10kΩ · 30kΩ · 100kΩ

4.1.3 Test frequency (FREQ)

Shows "---" when FUNC = DCR (no AC test signal). Per-model range:

Model	Frequency range
TH2830	50 Hz – 100 kHz
TH2832	20 Hz – 200 kHz
TH2832D	20 Hz – 300 kHz

Resolution narrows as frequency rises: 0.01 Hz below 100 Hz, 0.1 Hz to 1 kHz, 1 Hz to 10 kHz, 10 Hz to 100 kHz, 100 Hz above 100 kHz. Enter a frequency with the numeric keypad and a unit soft key (Hz/kHz/MHz), or step through the preset list with INCR/DECR.

4.1.4 Test level (LEVEL)

Set as the RMS value of the internal sine source, as voltage or current. **Range: 10 mV – 2 V** (current levels scale with the selected source resistance, §4.5.3). "Measurement voltage" is the open-terminal voltage; "measurement current" is the shorted-terminal current. When Auto Level Control is active (§4.5.2), an asterisk "*" follows the level value. Enter with numeric keys + a unit soft key (mV/V/µA/mA/A); switching between voltage and current units requires numeric entry (INCR/DECR alone cannot switch units).

4.1.5 DC BIAS

Internal DC bias source (TH2832 and TH2832D): **−1.5 V to +1.5 V** at 30Ω output resistance, or **−5 V to +5 V** at 100Ω. **Not available on TH2830.** Shows "---" when FUNC = DCR. Press the front-panel [BIAS] key to enable the output; the key is inactive when DC bias cannot be added (DCR, Lp-Rd, Ls-Rd functions, or on TH2830).

4.1.6 Test speed (SPEED)

Options: **FAST, MED, SLOW.** SLOW gives the most stable and accurate reading; see §7.1 for timing and §7.2 for the accuracy trade-off.

4.1.7 Tools — decimal-point display

Soft keys on the MEAS RESULT DISP zone: **D.P. AUTO** (restore floating decimal position), **D.P. FIX** (lock the primary result's decimal position), **D.P.POS INCR+ / DECRL−** (shift the locked decimal position one place left/right). The lock is cleared automatically whenever the test function or deviation-test mode changes.

4.2 <Bin No. Display>

Reached by DISP → BIN NO. Shows the sorted bin number (upper-case) and the test result (lower-case). The comparator function is switched ON/OFF here (COMP zone); bin limits are set only on <Limit Table Setup> (§4.7).

Up to **10 bins**: BIN1–BIN9 (primary-parameter limits) plus BIN OUT. If the primary parameter passes but the secondary parameter fails its limit, the DUT is sorted to the **AUX** bin (when the auxiliary bin is enabled, §4.7.5):

Primary result	Secondary result	Sorted to (AUX ON)	Sorted to (AUX OFF)
Pass	Pass	Matching bin, BIN1–BIN9	
Fail	—	BIN OUT	
Pass	Fail	AUX bin	BIN OUT

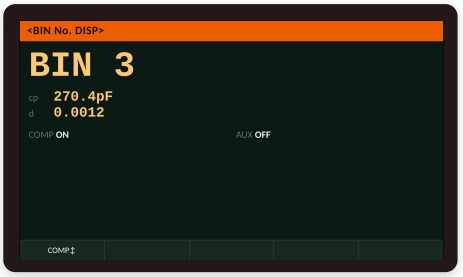

<BIN No. DISP> page

4.3 <Bin Count Display>

Shows the running count of DUTs sorted into each bin. PARAM, NOM. and HIGH/LOW are read-only here (set on <Limit Table Setup>, §4.7); COUNT (on/off) is set on this page.

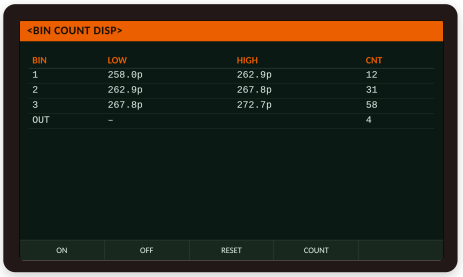

<BIN COUNT DISP> page

1. Cursor to COUNT → soft keys **ON / OFF / RESET COUNT**.
2. ON enables counting; OFF disables it.
3. RESET COUNT prompts "Reset count, Sure?" — **YES** zeroes all bin counts, **NO** cancels.

4.4 <List Sweep Display>

Auto-tests up to **201 points** (frequency, level or DC bias sweep), comparing each against its limit; a "►" marks the current sweep point. Sweep points themselves are set on <List Sweep Setup> (§4.8).

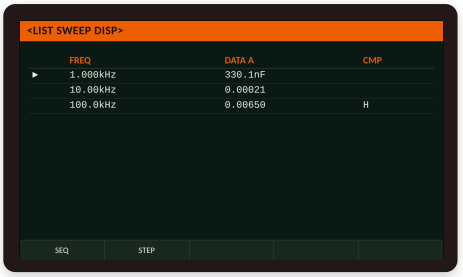

<LIST SWEEP DISP> page

Field	Meaning
MODE	**SEQ** — one [TRIGGER] press sweeps all points. **STEP** — one [TRIGGER] press sweeps one point. (With trigger mode INT, the sweep runs automatically and is not gated by [TRIGGER].)
CMP	Per-point compare result: **L** = below limit, **H** = above limit, blank = pass.

4.5 <Measure Setup>

Reached by [SETUP]. Shares FUNC/FREQ/LEVEL/RANGE/BIAS/SPEED with <Measurement Display> (§4.1) and adds the fields below.

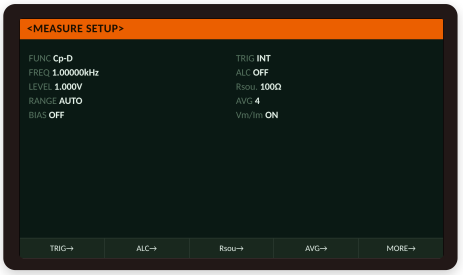

<MEASURE SETUP> page

4.5.1 Trigger mode (TRIG)

Mode	Behaviour
INT	Sequential, continuously repeated automatic tests.
MAN	One test per front-panel [TRIG] press.
EXT	One test per positive-edge pulse on the HANDLER interface (Chapter 9).
BUS	One test per trigger command over the remote interface. Not selectable from the front panel — set with `TRIGger:SOURce BUS` (§8.7).

A trigger received while a test is already running is ignored.

4.5.2 Auto Level Control (ALC)

Holds the real voltage across, or current through, the DUT constant at the set test level. Valid ranges while active: **10 mVrms – 1 Vrms** (constant voltage) or **100 µArms – 10 mArms** (constant current); ALC disables automatically if the set level falls outside these ranges. Soft keys: ON/OFF, default OFF.

4.5.3 Output impedance (Rsou.)

Soft keys: **100Ω / 30Ω.** Match this setting across instruments when comparing inductance readings between testers. Once the DC bias output is enabled, only 100Ω output resistance can be used (§4.1.5).

4.5.4 Average (AVG)

Averages 2 or more test results. Range **1 – 255**, step 1; INCR+/DECR− soft keys.

4.5.5 Voltage/current level monitor (Vm/Im)

Displays the real voltage across (Vm) or current through (Im) the DUT on <Measurement Display>. Values change when open/short/load correction is switched on or off. Soft keys: ON/OFF.

4.5.6 DCR polarity

DCR polarity is **ALT** (alternating positive/negative test voltage), which aids demagnetisation and accuracy — the only mode currently implemented.

4.5.7 Trigger delay / Step delay

Both programmable **0 – 60 s, 1 ms resolution** (numeric keypad + msec/sec unit key). Trigger delay is the wait from the trigger event to the start of the test — useful when a HANDLER fixture needs time to seat the DUT. Step delay is the wait between applying the drive signal and starting the test, and is particularly relevant to DCR/Rd measurements.

4.5.8 DC resistance range / level

DC range uses the same 11-step range set as DCR (§4.1.2). DC level: fixed at **1 V** on TH2830; adjustable **50 mV – 2 V** on TH2832 and TH2832D (TH2832D shares TH2832's measurement functions except where a model difference is explicitly noted — §1.1).

4.5.9 Deviation test (DEV A / DEV B)

Displays deviation from a reference instead of the raw reading — useful for watching a parameter vary with temperature, frequency or bias. **ΔABS** = X − Y; **Δ%** = (X − Y)/Y × 100%, where X = measured value, Y = reference (REF A/B).

1. Cursor to REF A; connect a reference component and press **MEASURE** to auto-populate it, or key the value in directly.
2. Repeat for REF B (secondary parameter) if needed.
3. Cursor to DEV A / DEV B → soft keys **ΔABS / Δ% / OFF** to choose the display mode for each parameter.

4.6 <Correction>

Eliminates stray admittance, spurious series impedance and gain/offset error from the test fixture and leads. Two correction modes are available and can be combined: **open + short correction**, applied across the full frequency sweep by interpolation between fixed calibration points; and **point-frequency correction** (open + short + load), applied at up to **201** specific frequencies. When both are active at the same frequency, point-frequency data takes priority.



<CORRECTION> page

> **NOTE**
> When sweep (interpolated) open/short correction is used, set the point-frequency correction field (FREQ) to OFF — the two should not be combined at the measurement frequency.

4.6.1 Open and short correction (full sweep)

1. Cursor to OPEN → leave the test fixture open (no DUT) → press **MEAS OPEN**. This tests open admittance at 34 fixed points (TH2830, 50Hz–100kHz) or 41 fixed points (TH2832, 20Hz–200kHz) and takes about 50 seconds; **ABORT** cancels and keeps the prior data. TH2832D's fixed-point count above 200 kHz is not currently published — see the note in §7.3.
2. Press **ON** to enable open correction.
3. Cursor to SHORT → fit the short plate to the fixture → press **MEAS SHORT** (also ~50 seconds).
4. Press **ON** to enable short correction.

DCR OPEN / **DCR SHORT** soft keys run the equivalent correction under the DC-resistance function.

4.6.2 Point-frequency correction (open, short and load)

Gives the best results for a single fixed test frequency. Up to 201 spots (SPOT No.), each with its own frequency and, for load correction, its own reference values.

1. Cursor to FREQ → **ON** → enter the correction frequency (numeric keys + Hz/kHz/MHz).
2. With the fixture open, press **MEAS OPEN**; cursor to OPEN → **ON**.
3. Fit the short plate, press **MEAS SHORT**; cursor to SHORT → **ON**.
4. Set FUNC to the parameter to be measured; enter the standard component's reference values at REF A / REF B.
5. Connect the standard component and press **MEAS LOAD**; cursor to LOAD → **ON**.

Load correction computes only the transport coefficient between the measured and reference values — it does not perform open/short-style subtraction, and is valid only for components of the same nominal specification used to derive it; redo it if the specification changes.

> **CAUTION**
> Only one spot's correction status is visible at a time, so it is easy to lose track across 201 points. Use **CLEAR CORR** on the Tools page (§4.9.1) to reset all point-frequency correction data at once before starting a new set.

4.6.3 Cable length

The only selectable value is **0 m** — this instrument does not offer cable-length compensation beyond zero.

4.7 <Limit Table Setup>

Sets the 9 primary-parameter bin limits (BIN1–BIN9) and the 1 secondary-parameter limit pair used by the comparator (§4.2). Fields: PARAM, MODE, NOM, AUX, COMP, and the HIGH/LOW value of each bin.

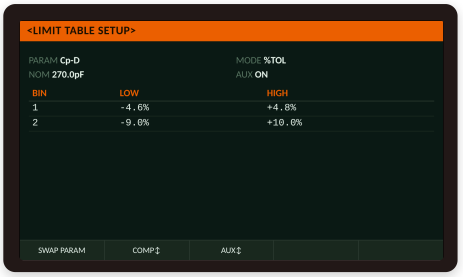

<LIMIT TABLE SETUP> page

4.7.1 Swap parameter

Soft key **SWAP PARAM** swaps which parameter gets the 9-bin treatment — e.g. FUNC = Cp-D normally sorts on Cp (9 bins) with D as the 1-bin secondary; SWAP PARAM flips the display to "D-Cp" so D is sorted on 9 bins instead.

4.7.2 Limit modes

Mode	Basis
%TOL	Percentage deviation from the nominal value (NOM).
ABS TOL	Absolute deviation from the nominal value.
SEQ MODE	Limits are the raw test-value range itself, entered low→high in sequence.

In tolerance modes, enter bin ranges from smallest to largest across BIN1→BIN9, or DUTs may all fall into the first bin wide enough to catch them.

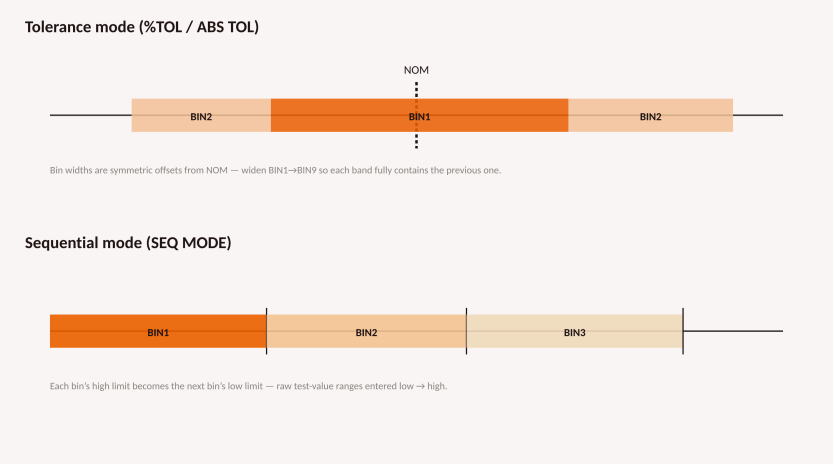

Sequential mode vs. tolerance mode — bin ranges around the nominal value

> **NOTE**
>
> A fourth mode, **TWO ABS**, appears on the soft-key row. This mode is not covered in this edition.

4.7.3 Nominal value (NOM)

Any value within the display range; required for tolerance modes, optional (but settable) in sequential mode. Unit soft keys p/n/µ/m/k/M or ***1** (auto-selects F, H or Ω to match the primary parameter).

4.7.4 / 4.7.5 Comparator and auxiliary bin

COMP (ON/OFF) enables sorting into BIN1–BIN9 + BIN OUT. AUX (ON/OFF) governs the secondary-parameter limit ("2nd" row): with AUX ON, a DUT that passes the primary limit but fails the secondary limit is sorted to the AUX bin instead of BIN OUT (§4.2).

4.7.6 Entering HIGH / LOW limits

Tolerance mode: enter the low limit of BIN1 (numeric keys + p/n/µ/m/k/M/*1); the high limit is derived automatically. The cursor advances through BIN2–BIN9, then the secondary ("2nd") low and high limits.

Sequential mode: enter the low, then high, limit of BIN1; BIN2's low limit is taken automatically from BIN1's high limit, and so on through BIN9, then the secondary low/high limits.

4.8 <List Sweep Setup>

Configures the sweep read on <List Sweep Display> (§4.4) — up to 201 points across frequency, level or bias. Up to two sweep parameters can be active at once, provided they are different from each other.

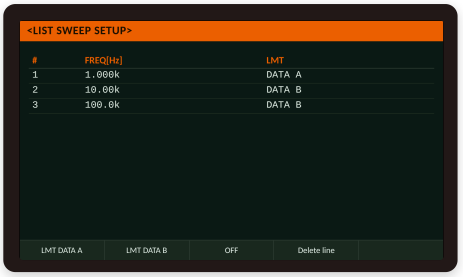

<LIST SWEEP SETUP> page

Field	Meaning
Sweep parameter	FREQ[Hz], LEVEL[V], LEVEL[A], BIAS[V] or BIAS[A] — chosen per sweep slot.
Per-point value	Frequency/level/bias value for that row, entered with the numeric keypad.
LMT	Soft keys **LMT DATA A** (compare primary parameter against this row's HIGH/LOW), **LMT DATA B** (compare secondary parameter), **OFF** (no compare for this row).

Unwanted rows can be removed with the **Delete line** soft key.

4.9 Tools

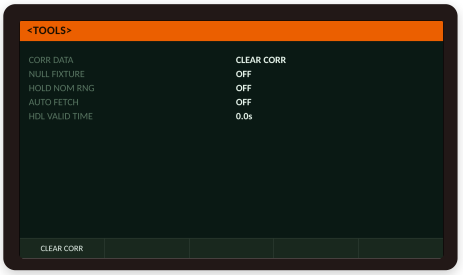

<TOOLS> page

Item	Function
4.9.1 CORR DATA	**CLEAR CORR** — clears correction data for all 201 point-frequency spots at once (confirmation prompt shown).
4.9.2 NULL FIXTURE	Detects a poor-contact or short-circuit fixture condition. The valid range is derived from the Limit Table's NOM value: **0.05×NOM to 100×NOM**. Readings outside this range are flagged as a fixture fault and the HANDLER sorting output is suppressed while the fault persists.
4.9.3 HOLD NOM RNG	Locks the measurement range from the Limit Table's NOM value for faster testing, even if RANGE (§4.1.2) is set to AUTO.
4.9.4 AUTO FETCH	Streams every result automatically over RS-232C/USB without a `FETCh?` command. The host must be ready to receive continuously while this is enabled.
4.9.5 HDL VALID TIME	Level-hold time for the HANDLER output signal, **0 – 2 s**. 0 = hold indefinitely until the next result changes it.

CHAPTER 5

System Setup & File Management

5.1 <System Setup>

Reached by pressing SETUP a second time. All fields on this page save automatically once you finish setting them.

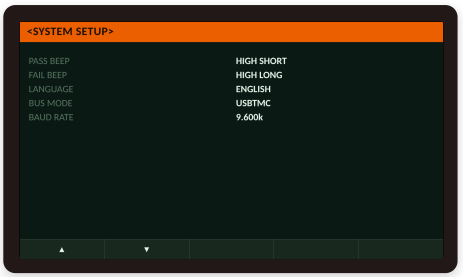

<SYSTEM SETUP> page

Field	Function
5.1.1 MAIN FUNC	Reserved for future use.
5.1.2 PASS BEEP	Beep on a qualified (PASS) result: HIGH LONG / HIGH SHORT / LOW LONG / TWO SHORT / OFF.
5.1.3 FAIL BEEP	Beep on an unqualified (FAIL) result: same option set as PASS BEEP.
5.1.4 LANGUAGE	ENGLISH / CHINESE.
5.1.5 PASS WORD	OFF · LOCK SYSTEM (protects startup + files) · LOCK FILE (files only) · MODIFY (change password). Default password: **0147852**.
5.1.6 BUS MODE	RS232C / GPIB / USBTMC / USBCDC. GPIB requires the optional GPIB interface to be fitted.
5.1.7 GPIB ADDR	Reserved function; adjustable with the ↑/↓ soft keys but only meaningful when the optional GPIB interface is fitted (§3.2).
5.1.8 TALK ONLY	ON/OFF. When ON, the instrument streams every result over the active bus interface without being addressed, and cannot be controlled by a host PC.
5.1.9 BIAS SRC	INT — internal bias source (TH2832/TH2832D; ±1.5V/±50mA at 30Ω, ±5V/±50mA at 100Ω). External TH1778 current source — up to 120A total using six units. Only 100Ω output impedance is available while a bias source is enabled.
5.1.10 BAUD RATE	RS-232C rate, 9.600k – 115.200k.
5.1.11 MENU DISP	HOLD (soft-key labels always shown) or a timed auto-hide; any key press redisplays them.
5.1.12 DATE/TIME	Sets the instrument's real-time clock.

5.2 <File Manage>

Saves and recalls complete instrument setups — every field on <Measure Setup>, <Bin Count Display>, <Limit Table Setup> and <List Sweep Setup>, plus the current page — as a single setup file, so a repeat job can be reloaded in seconds.



<LCR FILES LIST> page

Storage	Capacity
Internal memory	40 setup files
External USB drive (optional accessory, via the front-panel USB HOST port)	500 setup files

> NOTE — USB DRIVE COMPATIBILITY
> The instrument's USB HOST port supports USB 1.0/1.1 mass-storage drives formatted FAT16 or FAT32, up to 4 GB. Compatibility with larger or newer flash drives is not guaranteed; format the drive on Windows if it is not recognised.

5.2.1 Finding a file

Step through the list with the cursor keys (one at a time) or ←/→ (page at a time), or press **FIND** and type a character string, or enter a page number directly.

5.2.2 Saving a setup

1. Set up the instrument exactly as you want to save it.
2. Open <File Manage>; soft keys include LOAD, STORE, DEL, FIND, COPY TO E:, EXT. FILE.
3. Move to an empty (or replaceable) file slot, or type the file number directly.
4. Press **STORE** → confirm **Yes** → enter a filename (cursor + ADD CHAR, then ENTER to save, or ESC to cancel).

5.2.3 Loading a setup

1. Open <File Manage>, move to the file you want.
2. Press **LOAD** → confirm **Yes** to apply it; the display returns to the page it was saved from.

5.2.4 Copying a file to a USB drive

1. Open <File Manage> with a USB drive fitted; select one or more files.
2. Press **COPY TO E:** and wait for the progress indicator to finish.

Use a USB drive that meets §5.2 above and carries no write-protection.

CHAPTER 6

Measurement Examples

6.1 Correct connection of the DUT

Each of the four test terminals — Hcur, Hpot, Lpot, Lcur — has its own shielding return, which reduces stray ground capacitance and EM interference. For accurate 4-terminal measurement, connect Hcur/Hpot and Lpot/Lcur as separate pairs to the DUT leads rather than shorting them together at the terminal block; for low-impedance DUTs in particular, Hpot/Lpot should sense the voltage actually present at the DUT rather than adding lead impedance to the reading.

Hcur+Hpot and Lpot+Lcur may be tied together ahead of the DUT (effectively a 2-terminal connection) only when lead resistance is negligible against the tested impedance — as a rule of thumb, $R_{lead} < Zx / 1000$ for <0.1% added error.

The standard Kelvin test fixture gives the best accuracy and works well below 10 kHz; above 10 kHz, lead position starts to affect stray inductance/capacitance and a rigid test fixture should be used instead of leads (or, if leads must be used, keep their position identical between correction and measurement). Any fixture — Kelvin leads, standard fixture, or user-made — needs low distribution impedance, low contact resistance, and a reliable open/short state for correction.

> **WARNING — DISCHARGE THE DUT**
>
> Discharge polarised or capacitive components before connecting them, to avoid instrument damage. Connect a polarised component's positive/high terminal to the Hc/Hp mark, negative/low to Lc/Lp.

6.2 Eliminating the influence of stray impedance

For high-impedance DUTs (e.g. small capacitance), stray capacitance between the test leads and any nearby ground plane can add a significant parallel error path. Fitting a grounded shield conductor between the high and low terminals, and connecting it to any conductive surface under the DUT, removes most of this stray coupling — this is the same "guarded" connection principle used by the standard Techmize test fixtures.

6.3 Example 1 — Testing inductance

Setting	Value
Function	Ls-Q
Frequency	5 kHz
Level	1.5 Vrms
Output impedance (Rsou.)	100Ω

1. On <Measurement Display> (§4.1), set FUNC to **Ls-Q**, FREQ to **5.00000 kHz**, LEVEL to **1.5 V**.
2. On <Measure Setup> (§4.5), set Rsou. to **100Ω**.
3. Connect test fixture TH26005 to the front-panel terminals.
4. Run point-frequency open/short correction at 5 kHz (§4.6.2).
5. Mount the inductor under test on the fixture and read the result on <Measurement Display>.

If the reading looks wrong, check the inductor's contact with the fixture, the fixture's contact with the instrument terminals, and redo the open/short correction.

6.4 Example 2 — Capacitance by multi-frequency list sweep

Frequency	Compare parameter	Low limit	High limit
1 kHz	Cp	325.0 nF	333.0 nF
10 kHz	D	0.0001	0.0003
100 kHz	D	0.0060	0.0100

Function Cp-D, level 1 Vrms, FAIL beep HIGH LONG.

1. On <List Sweep Setup> (§4.8), set the sweep parameter to FREQ[Hz] and enter the three frequency points above.
2. For each point, set LMT to **LIMIT DATA A** (1 kHz row, compares Cp) or **LIMIT DATA B** (10/100 kHz rows, compare D) and enter its low/high limits.
3. On <System Setup> (§5.1.3), set FAIL BEEP to HIGH LONG.
4. Fit fixture TH26005, run sweep open/short correction (§4.6.1), then insert the capacitor under test.
5. Read results on <List Sweep Display> (§4.4) — H/L compare flags and the fail beep flag any out-of-limit point.

6.5 Example 3 — Comparator setup: capacitor sorting

Sort a 0805CG271 (270 pF) ceramic capacitor into two tolerance bins, with a loss (D) check on the side.

Setting	Value
Function	Cp-D, frequency 100 kHz, level 1 Vrms, speed SLOW
Nominal (NOM)	270 pF, limit mode %TOL
BIN1 (J)	−5.0% to +5.0%
BIN2 (K)	−10.0% to +10.0%
Secondary limit (D)	0.0000 – 0.0015, AUX = ON
Trigger	EXT (external, via HANDLER)
Alarm	FAIL BEEP = HIGH LONG

1. On <Measurement Display>, select Cp-D and set frequency/level/speed.
2. On <Measure Setup>, set TRIG to EXT.
3. On <Limit Table Setup> (§4.7), set NOM = 270pF, MODE = %TOL, enter BIN1/BIN2 limits, secondary D limits, COMP = ON, AUX = ON.
4. On <System Setup>, set FAIL BEEP = HIGH LONG.
5. Return to <Measurement Display> or <Bin No. Display> to run production testing.

Because impedance at 100 kHz for a small capacitance like this is well above 1 kΩ, the parallel equivalent mode (Cp) is the correct choice; setting AUX = ON means a capacitor that passes the capacitance window but fails the loss check is diverted to the AUX bin rather than counted as an outright reject.

6.6 Example 4 — Load correction

Reference component: Cp = 11 nF, D = 0.0005 at 100 kHz.

1. On <Correction> (§4.6), turn OPEN, SHORT and LOAD all **ON**; set FUNC to Cp-D.
2. Cursor to FREQ → **ON** → enter **100.000 kHz**.
3. Enter the reference values: REF A = **11.0000 nF**, REF B = **0.00050**.
4. With the fixture open, press **MEAS OPEN**.
5. Fit the short plate (TH26010), press **MEAS SHORT**.
6. Insert the standard (reference) capacitor, press **MEAS LOAD**.

Load correction is valid only for components of the same specification as the standard used to derive it — redo the procedure if the specification changes.

CHAPTER 7

Performance & Specifications

Ratings apply after **at least 30 minutes** of warm-up — a stricter accuracy-verification condition than the 15-minute general operating minimum in §1.3 — with correction (§4.6) performed after warm-up, DC bias off, and the range set to AUTO unless stated otherwise.

7.1 Parameters and test conditions

Symbol	Meaning	Symbol	Meaning
C	Capacitance	D	Dissipation factor
L	Inductance	Q	Quality factor
R	Resistance	θ	Phase angle
Z	Impedance	DCR	DC resistance
Y	Admittance	X	Reactance
G	Conductance	B	Susceptance

Equivalent circuit: series or parallel. Range: AUTO or manual (HOLD/INCR/DECR — §4.1.2). Test-terminal connection: 4-terminal (Hcur, Lcur, Hpot, Lpot — §3.1). Display: 6 digits, up to 999999.

Speed (at ≥10 kHz)	Rate	Time / reading
Fast	~75/s	13 ms
Medium	~12/s	83 ms
Slow	~6/s	167 ms

Below 10 kHz, FAST and MEDIUM slow down (no separate figures published). Averaging: 1–255 readings (§4.5.4).

7.1.1 Maximum display range

Parameter	Range
L	0.00001 µH – 99.9999 kH
C	0.00001 pF – 9.99999 F
Z, R, X, DCR	0.00001 Ω – 99.9999 MΩ
Y, B, G	0.00001 µS – 99.9999 S
D	0.00001 – 9.99999
Q	0.00001 – 99999.9
θ	−179.999° – 179.999° (−3.14159 – 3.14159 rad)

7.2 Test signal and source

Model	Frequency range	Accuracy	Resolution
TH2830	50 Hz – 100 kHz	0.01%	0.01 Hz (min.)
TH2832	20 Hz – 200 kHz		
TH2832D	20 Hz – 300 kHz		

Signal mode: **Normal** (level is the nominal source setting; terminal voltage can sag under load) or **Constant level** (internal level auto-adjusts so the DUT sees the preset voltage).

Signal	Mode	Range (100Ω output resistance)	Accuracy	Resolution
Voltage	Normal	10 mV – 2 Vrms	±(10%×setting + 2mV)	10 mV
Voltage	Constant level	10 mV – 1 Vrms	±(6%×setting + 2mV)	10 mV
Current	Normal	100 µA – 20 mArms	±(10%×setting + 10µA)	100 µA
Current	Constant level	100 µA – 10 mArms	±(6%×setting + 10µA)	100 µA

Values above apply at 100Ω output resistance; they do not necessarily apply at 30Ω (§4.5.3). The remote (SCPI) interface allows a lower minimum than front-panel manual entry — see `VOLTage` / `CURRent` in §8.3. This is a confirmed difference between the two entry methods, not an error.

Output impedance: 30Ω or 100Ω ± 1% (§4.5.3). Signal-level monitor accuracy: ±(3%×reading + 0.5mV) from 5mV–2V, ±(12%×reading + 0.1mV) below 5mV; current monitor ±(3%×reading + 5µA) from 50µA–20mA, ±(12%×reading + 1µA) from 0.001µA–50µA.

7.2.1 DC bias source

Output impedance	Voltage	Current	Voltage accuracy
100Ω	0 – ±5 V, 1 mV res.	0 – ±50 mA, 10 µA res.	±(1%×setting + 5mV)
30Ω	0 – ±1.5 V, 1 mV res.	0 – ±50 mA, 10 µA res.	±(1%×setting + 5mV)

Values above are the configurable setting range for each output-resistance selection. Once DC bias is enabled, only 100Ω output resistance can be used (§4.5.3). Built-in DC bias source is fitted to **TH2832 and TH2832D**; not available on TH2830. An external TH1778 current source can be added for higher bias current (§5.1.9).

7.3 Measurement accuracy

Basic accuracy: 0.05% for |Z|, |Y|, L, C, R, X, G, B (LCRZ functions); **0.1%** for DCR — achieved at medium/slow speed, test level 0.4–1.2 Vrms, after warm-up and correction, within the calibrated frequency points.

Full accuracy is a function of measured impedance, test frequency, signal level, cable length and ambient temperature, combined as:

$$Ae = \pm [\ A + (Ka+Kb+Kc)\times 100 + Kd + Kf\ ] \times Ke \quad [\%]$$

where A is the basic accuracy, selected from the nomograph in §7.3.1 (Fig. A) and, outside 0.4–1.2 Vrms, corrected by the curve in §7.3.2 (Fig. B); Ka/Kb are the impedance-ratio factors in §7.3.3 (Table A) — **Ka and Kb are mutually exclusive by impedance: use Ka when the measured impedance is below 500Ω (Kb does not apply), and Kb when it is 500Ω or above (Ka does not apply)**; Kc is the calibration-interpolation factor in §7.3.4 (Table B — zero exactly at a calibrated frequency point, listed in §7.3.5/Table C); Kd is the cable-length factor in §7.3.6 (Table D); Ke is the temperature factor in §7.3.7 (Table E); and Kf = 0.2 if a scanner/multiplexer fixture is used, otherwise 0.

D, Q, θ, G, Rp and Rs accuracies are derived from Ae and De as follows (Dx, Qx = the measured D/Q value):

Parameter	Formula	Condition
D	$De = \pm Ae / 100$	Valid while Dx ≤ 0.1; if Dx > 0.1, multiply De by (1+Dx)
Q	$Qe = \pm Qx^2 \cdot De / (1 \mp Qx \cdot De)$	Valid while Qx×De < 1
θ (phase angle)	$\theta e = (180/\pi) \times (Ae/100)$ [deg]	Derived directly from Ae
G (conductance)	$Ge = Bx + De$ [S] $Bx = 2\pi fCx = 1/(2\pi fLx)$	Dx ≤ 0.1; only for Cp-G and Lp-G measurement combinations
Rp (parallel R)	$Rpe = \pm Rpx \cdot De / (Dx \mp De)$ [Ω]	Dx ≤ 0.1
Rs (series R)	$Rse = Xx \cdot De$ [Ω] $Xx = 2\pi fLx = 1/(2\pi fCx)$	Dx ≤ 0.1

Overall use condition on Ae itself (before the D/Q-dependent formulas above): for L, C, X, B the condition is Dx ≤ 0.1 — if Dx ≥ 0.1, multiply Ae by $\sqrt{(1+Dx^2)}$; for R, G the condition is Qx ≤ 0.1 — if Qx ≥ 0.1, multiply Ae by $\sqrt{(1+Qx^2)}$.

7.3.1 Basic accuracy A — nomograph (Fig. A)

Find the measured impedance |Z| on the centre scale (or |Y|, G, B on the left scale for admittance-type parameters), follow it across to the test frequency on the horizontal axis, and read the basic accuracy A from the zone it falls in. Where a point lies exactly on a boundary line, use the smaller (better) of the two adjoining values.

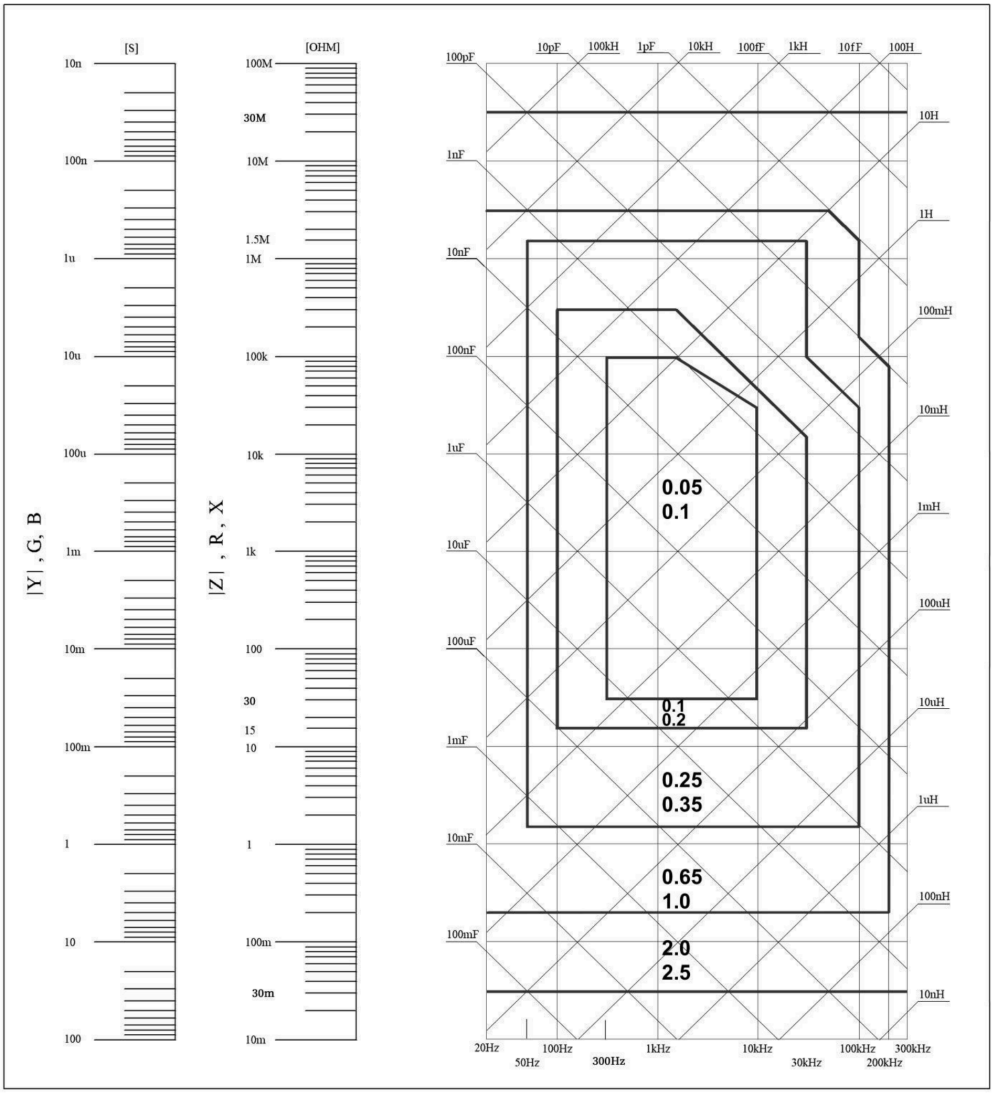

Fig. A — Basic measurement accuracy A, by impedance/admittance and test frequency

Which of the two values printed in each zone (e.g. "0.05 / 0.1") applies depends on test speed, provided the test signal is within 0.4–1.2 Vrms:

- The **lower** value applies at medium or slow speed.
- The **higher** value applies at fast speed.

If the test signal Vs is outside 0.4–1.2 Vrms, first select A as above for the current speed, then multiply it by the correction factor Ar read from Fig. B (§7.3.2) at the actual signal voltage Vs.

7.3.2 Basic-accuracy correction curve Ar (Fig. B)

Used only when the test signal Vs falls outside 0.4–1.2 Vrms (§7.3.1). Read Ar at the actual signal voltage and multiply it into the basic accuracy A selected from Fig. A.

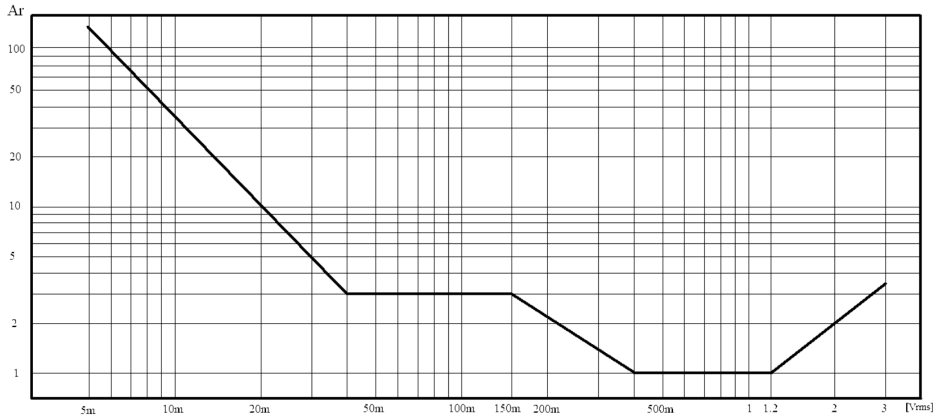

Fig. B — Basic-accuracy correction factor Ar vs. test signal voltage Vs

7.3.3 Impedance-ratio factors Ka, Kb (Table A)

fm = test frequency [Hz]; |Zm| = measured impedance [Ω]; Vs = test signal voltage [mVrms]. As stated in §7.3: use Ka when the measured impedance is below 500Ω, Kb when it is 500Ω or above — never both.

Speed	Frequency	Ka	Kb
Medium / Slow	fm < 100 Hz	$(\frac{1\times10^{-3}}{\lvert Z_m\rvert})(1+\frac{200}{V_s})(1+\sqrt{\frac{100}{f_m}})$	$\lvert Z_m\rvert(1\times10^{-9})(1+\frac{70}{V_s})(1+\sqrt{\frac{100}{f_m}})$
	100 Hz ≤ fm ≤ 100 kHz	$(\frac{1\times10^{-3}}{\lvert Z_m\rvert})(1+\frac{200}{V_s})$	$\lvert Z_m\rvert(1\times10^{-9})(1+\frac{70}{V_s})$
	100 kHz < fm ≤ 200 kHz	$(\frac{1\times10^{-3}}{\lvert Z_m\rvert})(2+\frac{200}{V_s})$	$\lvert Z_m\rvert(3\times10^{-9})(1+\frac{70}{V_s})$
Fast	fm < 100 Hz	$(\frac{2.5\times10^{-3}}{\lvert Z_m\rvert})(1+\frac{400}{V_s})(1+\sqrt{\frac{100}{f_m}})$	$\lvert Z_m\rvert(2\times10^{-9})(1+\frac{100}{V_s})(1+\sqrt{\frac{100}{f_m}})$
	100 Hz ≤ fm ≤ 100 kHz	$(\frac{2.5\times10^{-3}}{\lvert Z_m\rvert})(1+\frac{400}{V_s})$	$\lvert Z_m\rvert(2\times10^{-9})(1+\frac{100}{V_s})$
	100 kHz < fm ≤ 200 kHz	$(\frac{2.5\times10^{-3}}{\lvert Z_m\rvert})(2+\frac{400}{V_s})$	$\lvert Z_m\rvert(6\times10^{-9})(1+\frac{100}{V_s})$

Table A — Impedance-ratio factors Ka, Kb, by speed and frequency band

7.3.4 Calibration-interpolation factor Kc (Table B)

Test frequency	Kc
At a calibrated (direct-calibration) frequency point — §7.3.5	0
At any other frequency	0.0003

7.3.5 Direct calibration frequencies (Table C)

Confirmed for TH2832 (20 Hz – 200 kHz); TH2830 uses the subset within its 50 Hz – 100 kHz range. TH2832D's calibration points between 200 kHz and its 300 kHz ceiling are to be added.

20, 25, 30, 40, 50, 60, 80	Hz
100, 120, 150, 200, 250, 300, 400, 500, 600, 800	Hz
1, 1.2, 1.5, 2, 2.5, 3, 4, 5, 6, 8	kHz
10, 12, 15, 20, 25, 30, 40, 50, 60, 80	kHz
100, 120, 150, 200	kHz

7.3.6 Cable-length factor Kd (Table D)

Test signal level	0 m	1 m	2 m
≤ 1.5 Vrms	0	2.5×10^{-4} (1+50·fm)	5×10^{-4} (1+50·fm)
> 1.5 Vrms	0	2.5×10^{-3} (1+16·fm)	5×10^{-3} (1+50·fm)

fm = test frequency [MHz]. When using a scanning/multiplexer fixture, use the Kd value for 2 m cable length regardless of actual cable length.

7.3.7 Temperature factor Ke (Table E)

Ambient temperature	Ke
< 5 °C	6
5 – 8 °C	4
8 – 18 °C	2
18 – 28 °C	1
28 – 38 °C	2
> 38 °C	4

7.3.8 DCR accuracy

$$Ae = A \times (1 + Rx/5M\Omega + 16m\Omega/Rx)\ [\%] \pm 0.2\ m\Omega$$

A = 0.1 at medium/slow speed, 0.25 at fast speed; Rx = tested resistance.

7.4 Dimensions and weight

Item	TH2830 / TH2832	TH2832D
Bench dimensions (W×H×D)	235 × 105 × 360 mm	
Rack-mount dimensions (W×H×D)	215 × 88 × 335 mm	
Weight	≈ 3.6 kg	≈ 2 kg

PART II

Remote Control & Handler Interface

The chapters that follow document the TH283X series' SCPI-style remote command set (Chapter 8) and the optional HANDLER interface used for automated bin sorting (Chapter 9). Part I (Chapters 1–7) is sufficient for front-panel operation; Part II is intended for engineers integrating the instrument into a test system.

CHAPTER 8

Remote Command Reference

This chapter is a complete reference to the instrument's SCPI-style command set, organised by subsystem for easy lookup. Numeric parameters use standard SCPI notation: **NR1** = integer (e.g. `123`), **NR2** = fixed-point (e.g. `12.3`), **NR3** = floating-point (e.g. `12.3E+5`). **NL** = newline (ASCII 10), **^END** = the IEEE-488 EOI signal. Commands are shown with the shortest legal abbreviation in capitals (e.g. `DISPlay` can be sent as `DISP`); a query form appends `?`.

8.1 Remote interfaces

Interface	Notes
RS-232C	Standard on all models. Baud rate set at §5.1.10.
USB Device (USBTMC / USBCDC)	Standard on all models.
GPIB (IEEE-488)	*Optional* — requires the GPIB interface board to be fitted (§3.2, §5.1.6).

> NOTE
> The TH283X series has no Ethernet/LAN hardware (see the rear-panel interfaces in §3.2) and no LAN command subsystem exists; LAN is not an available remote interface.

Select the active bus with BUS MODE (§5.1.6). Use **TALK ONLY** (§5.1.8) only for simple result logging to a dumb terminal/printer — it disables PC control of the instrument.

8.2 DISPlay subsystem

Sets the active display page and the cosmetics of the measurement-result readout.

Command	Details
`DISPlay:PAGE <page>`	: `MEASurement` · `BNUMber` · `BCOunt` · `LIST` · `MSETup` · `CSETup` · `LTABle` · `LSETup` · `SYSTem` · `FLISt`. Query: `DISPlay:PAGE?` → page name. Example: `DISP:PAGE MEAS` selects <Measurement Display>.
`DISPlay:LINE "<string>"`	Sets/reads the current measurement-item label (up to 16 ASCII characters), which can double as a file name when saving. Query: `DISPlay:LINE?` → string. Example: `DISP:LINE "Resistor meas"`.
`DISPlay:RFONt <font>`	: `LARGe` (12ms/reading), `TINY` (5ms/reading), `OFF` (result not shown, still readable over the bus). Query: `DISPlay:RFONt?`. Example: `DISP:RFON LARG`.

8.3 FREQuency, VOLTage, CURRent, AMPLitude and Output RESistance subsystems

These five single-purpose subsystems set the AC test signal directly; each behaves the same way as the matching <Measurement Display> field (§4.1).

Command	Details
`FREQuency <value>|MIN|MAX`	Test frequency. : NR1/NR2/NR3 + Hz/kHz/MHz. MIN = 50Hz (20Hz on TH2832/TH2832D); MAX = 100kHz on TH2830 (200kHz TH2832, 300kHz TH2832D — §4.1.3). Query: `FREQuency?` → NR3. Example: `FREQ 1KHZ`.
`VOLTage <value>|MIN|MAX`	Test signal voltage. : NR1/NR2/NR3 + V. MIN = 5mV, MAX = 2V — the remote-settable minimum is lower than the 10mV front-panel manual-entry minimum (§7.2); this is a confirmed difference, not an error. Query: `VOLTage?` → NR3. Example: `VOLT 1V`.
`CURRent <value>|MIN|MAX`	Test signal current. : NR1/NR2/NR3 + mA. MIN = 50µA, MAX = 20mA — the remote-settable minimum is lower than the 100µA front-panel manual-entry minimum (§7.2); this is a confirmed difference, not an error. Query: `CURRent?` → NR3. Example: `CURR 10MA`.
`AMPLitude:ALC ON|OFF|1|0`	Auto Level Control (§4.5.2). TH2832/TH2832D only — not available on TH2830. Query: `AMPLitude:ALC?` → NR1. Example: `AMPL:ALC 0`.
`ORESister 30|100`	Output source resistance in Ω (§4.5.3). Query: `ORESister?` → NR1. Example: `ORES 30`.

8.4 BIAS subsystem

`BIAS:STATe` and `BIAS:VOLTage` (below) set the **internal** DC bias source (TH2832/TH2832D only — §4.1.5). `BIAS:CURRent` is different: it sets the current on the **external** TH1778 bias current source accessory (§5.1.9), not the internal source. It is GPIB-only because the RS-232 interface is reserved for controlling the external bias source. Once DC bias is enabled, only 100Ω output resistance (`ORESister`, §4.5.3) can be used.

Command	Details
`BIAS:STATe ON|OFF|1|0`	DC bias output on/off. Query: `BIAS:STATe?` → NR1. Example: `BIAS:STAT 0`.
`BIAS:VOLTage <value>|MIN|MAX`	Internal bias voltage. MIN = 0V. MAX = 1.5V at 30Ω output resistance, or 5V at 100Ω (§4.5.3). Query: `BIAS:VOLTage?` → NR3. Example: `BIAS:VOLT MIN`.
`BIAS:CURRent <value>|MIN|MAX`	Sets the current on the external TH1778 bias current source (§5.1.9) — requires the optional GPIB interface, because RS-232 is reserved for controlling the external bias source. MIN = 0A, MAX = 100mA at 30Ω output resistance or 50mA at 100Ω — this is the per-setting configurable range; once DC bias is enabled, only 100Ω output resistance can be used (§4.5.3). Query: `BIAS:CURRent?` → NR3. Example: `BIAS:CURR MIN`.

8.5 FUNCtion subsystem

Sets the measured parameter pair, range, source monitors, deviation-test mode and step delay.

Command	Details
`FUNCtion:IMPedance <fn>`	Sets the measured parameter pair — see the 25-value function enum in §8.5.1. Query: `FUNCtion:IMPedance?` → <fn>. Example: `FUNC:IMP RX` (R-X).
`FUNCtion:IMPedance:RANGe <value>`	Measurement range, in Ω or kΩ. Query values: 3, 10, 30, 100, 300, 1000, 3000, 10000, 30000, 100000. Example: `FUNC:IMP:RANG 1KOHM`.
`FUNCtion:IMPedance:RANGe:AUTO ON|OFF|1|0`	Auto-range on/off. Query: `FUNCtion:IMPedance:RANGe:AUTO?` → NR1. Example: `FUNC:IMP:RANG:AUTO ON`.
`FUNCtion:SMONitor:VAC ON|OFF|1|0`	Voltage monitor (Vm) display on/off (§4.5.5). Query returns NR1. Example: `FUNC:SMON:VAC ON`.
`FUNCtion:SMONitor:IAC ON|OFF|1|0`	Current monitor (Im) display on/off. Query returns NR1. Example: `FUNC:SMON:IAC ON`.
`FUNCtion:DEV<n>:MODE ABSolute|PERCent|OFF`	Deviation-test display mode (§4.5.9). <n>: 1 = primary parameter, 2 = secondary. Query returns ABS/PERC/OFF. Example: `FUNC:DEV1:MODE ABS`.
`FUNCtion:DEV<n>:REFerence <value>`	Deviation reference (nominal) value, NR1/NR2/NR3. Query returns NR3. Example: `FUNC:DEV1:REF 10`.
`FUNCtion:DEV<n>:REFerence:FILL`	Triggers one measurement and copies its result into the DEV<n> reference value. Example: `FUNC:DEV1:REF:FILL`.
`FUNCtion:StepDELay <value>|MIN|MAX`	Step delay (§4.5.7), 0–60s, 1ms resolution. Query returns NR3. Example: `FUNC:SDEL 5S`.

8.5.1 Function enum (used by FUNCtion:IMPedance and CORRection:LOAD:TYPE)

CPD (Cp-D) · CPQ (Cp-Q) · CPG (Cp-G) · CPRP (Cp-Rp) · CSD (Cs-D) · CSQ (Cs-Q) · CSRS (Cs-Rs) · LPQ (Lp-Q) · LPD (Lp-D) · LPG (Lp-G) · LPRP (Lp-Rp) · LPRD (Lp-Rd) · LSD (Ls-D) · LSQ (Ls-Q) · LSRS (Ls-Rs) · LSRD (Ls-Rd) · RX (R-X) · ZTD (Z-θ°) · ZTR (Z-θr) · YTD (Y-θ°) · YTR (Y-θr) · GB (G-B) · RPQ (Rp-Q) · RSQ (Rs-Q) · DCR

8.6 LIST subsystem

Programs the <List Sweep Setup> table (§4.8) — up to **201** sweep points across two independent columns per parameter. Only one of frequency/level/current/bias can drive a given column at a time; do not send more than one sweep-parameter command for the same column.

Command	Details
`LIST:FREQuency <v>[,<v>*]` (col. 1) `LIST:FREQuency1 <v>[,<v>*]` (col. 2)	Sets the sweep to frequency and loads up to 201 point values (clears prior list data first). <v>: NR1/NR2/NR3 + Hz/kHz, 20Hz–200kHz (300kHz on TH2832D). Query (col. 1): `LIST:FREQuency?` → NR3 list. Example: `LIST:FREQ 1E3,2E3,3E3,4E3`.
`LIST:VOLTage <v>[,<v>*]` (col. 1) `LIST:VOLTage1 <v>[,<v>*]` (col. 2)	Sets the sweep to test level (voltage) and loads up to 201 points, 10mV–2V. Query: `LIST:VOLTage?` → NR3 list. Example: `LIST:VOLT 1E-2,2E-2,3E-2,4E-2` (10/20/30/40mV).
`LIST:CURRent <v>[,<v>*]` (col. 1) `LIST:CURRent1 <v>[,<v>*]` (col. 2)	Sets the sweep to test level (current) and loads up to 201 points: 100µA–20mA at 100Ω output resistance, or 333µA–66.7mA at 30Ω. Query: `LIST:CURRent?` → NR3 list. Example: `LIST:CURR 10MA`.
`LIST:BIAS:VOLTage <v>[,<v>*]` (col. 1) `LIST:BIAS1:VOLTage <v>[,<v>*]` (col. 2)	Sets the sweep to DC bias voltage and loads up to 201 points, NR1/NR2/NR3. Query: `LIST:BIAS:VOLTage?` → NR3 list. Example: `LIST:BIAS:VOLT 1.5V`.
`LIST:BIAS:CURRent <v>[,<v>*]` (col. 1) `LIST:BIAS1:CURRent <v>[,<v>*]` (col. 2)	Sets the sweep to DC bias current (TH2832/TH2832D internal bias only — TH2830 needs an external DC bias source). Query: `LIST:BIAS:CURRent?` → NR3 list. Example: `LIST:BIAS:CURR 100MA`.
`LIST:MODE SEQuence|STEPped`	Sweep mode (§4.4.1). Query returns SEQ/STEP. Example: `LIST:MODE SEQ`.
`LIST:BAND<n> A|B|OFF[,<lo>,<hi>]`	Sets the compare source and limits for sweep row <n> (1–201). A = compare primary parameter, B = secondary, OFF = no compare. Query: `LIST:BAND<n>?` → parameter,lo,hi. Example: `LIST:BAND1 A,10,20`.
`LIST:CLEar:ALL`	Clears all list-sweep data. Example: `LIST:CLE`.

8.7 APERture and TRIGger subsystems

Command	Details
`APERture FAST|MEDium|SLOW[,<avg>]`	Measurement speed (FAST ≈75/s, MEDium ≈12/s, SLOW ≈6/s — §7.1) and averaging count <avg> = 1–255 (NR1, §4.5.4). Query: `APERture?` → speed[,avg]. Example: `APER MED,55`.
`TRIGger[:IMMediate]`	Fires one triggered measurement. Example: `TRIG`.
`TRIGger:SOURce INTernal|EXTernal|BUS|HOLD`	Trigger source (§4.5.1). INTernal = free-run (default); EXTernal = HANDLER interface (Chapter 9); BUS = triggered by this command set over RS-232C/GPIB/USB; HOLD = front-panel **TRIG** key (labelled MAN on <Measure Setup>). Query returns INT/EXT/BUS/HOLD. Example: `TRIG:SOUR BUS`.
`TRIGger:DELay <value>|MIN|MAX`	Delay from trigger to start of test, 0–60s, 1ms resolution (§4.5.7). Query returns NR3. Example: `TRIG:DEL 5S`.

8.8 FETCh? and RS232 automatic return

`FETCh[:IMP]?` reads the last measurement result from the output buffer. Typical sequence: `TRIG:SOUR BUS` → `TRIG` → `FETC?`. All data is returned as ASCII.

On <Measurement Display>, <Bin No. Display> and <Bin Count Display>: `<DATA A>,<DATA B>,<Status>,<BIN>`. On <List Sweep Display>: `<DATA A>,<DATA B>,<Status>,<Judge>` (once per sweep point).

Field	Values
DATA A / DATA B	NR3, 12-digit ASCII (`SN.NNNNNESNN`): primary / secondary reading. Reads 9.99999E37 when Status is −1, +1 or +2.
Status	2-digit ASCII. −1 no data in buffer · 0 normal measurement · +1 LCR unbalance · +2 A/D converter fault · +3 signal source overload · +4 constant-level cannot be adjusted.
BIN	2–3 digit ASCII. 0 out of tolerance · +1…+9 Bin1–Bin9 · +10 auxiliary bin. Only populated when the comparator is ON.
Judge (list sweep)	2-digit ASCII. −1 low · 0 pass · +1 high. Always 0 when the list-sweep compare function is off.

`:RS232:PRINT ON|OFF|1|0` — auto-streams each result (same format as `FETCh?`) after every trigger completes; the setting is not retained across power-off. Example: `:RS232:PRINT 1`.

8.9 CORRection subsystem

Programs open/short/load correction (§4.6). `SPOT<n>` commands (n = 1–201) address the point-frequency correction table; the full-sweep commands run correction across all fixed calibration points at once.

Command	Details
`CORRection:LENGth <value>`	Cable length, 0/1/2/4M — at present only 0M is implemented (§4.6.3). Query: `CORRection:LENGth?` → NR1. Example: `CORR:LENG 0M`.
`CORRection:METHod SINGle|MULTiple`	Correction channel mode. Query returns SINGle/MULTi. Example: `CORR:METH MULT`.
`CORRection:OPEN`	Runs open correction across the fixed calibration points (34 on TH2830, 41 on TH2832; TH2832D's point count above 200 kHz is not separately published — §4.6.1, §7.3). Example: `CORR:OPEN`.
`CORRection:OPEN:STATe ON|OFF|1|0`	Enables/disables open correction. Query returns NR1. Example: `CORR:OPEN:STAT ON`.
`CORRection:SHORt`	Runs short correction across the fixed calibration points. Example: `CORR:SHOR`.
`CORRection:SHORt:STATe ON|OFF|1|0`	Enables/disables short correction. Query returns NR1. Example: `CORR:SHOR:STAT ON`.
`CORRection:LOAD:STATe ON|OFF|1|0`	Enables/disables load correction. Query returns NR1. Example: `CORR:LOAD:STAT ON`.
`CORRection:LOAD:TYPE <fn>`	Measured parameter used for load correction — enum in §8.5.1. Query returns <fn>. Example: `CORR:LOAD:TYPE CPD`.
`CORRection:SPOT<n>:STATe ON|OFF|1|0`	Enables/disables point-frequency correction at spot <n> (1–201). Query returns NR1. Example: `CORR:SPOT1:STAT ON`.
`CORRection:SPOT<n>:FREQuency <value>`	Frequency of spot <n>, Hz/kHz/MHz, 20Hz–200kHz (300kHz TH2832D). Query returns the frequency. Example: `CORR:SPOT1:FREQ 2KHZ`.
`CORRection:SPOT<n>:OPEN`	Runs open correction for spot <n> only. Example: `CORR:SPOT1:OPEN`.
`CORRection:SPOT<n>:SHORt`	Runs short correction for spot <n> only. Example: `CORR:SPOT1:SHOR`.
`CORRection:SPOT<n>:LOAD:STANdard <REF A>, <REF B>`	Sets the standard reference values for load correction at spot <n> (units follow the active function). Query returns REF A,REF B. Example: `CORR:SPOT1:LOAD:STAN 0.0017,2`.
`CORRection:USE:DATA?`	Returns the OPEN/SHORT/LOAD correction data for all 201 spots, as repeating groups of 6 NR3 values (open A, open B, short A, short B, load A, load B) per spot.
`CORRection:CLEar`	Clears correction data for all points. Example: `CORR:CLE`.

8.10 COMParator subsystem

Programs the bin comparator and <Limit Table Setup> (§4.7).

Command	Details
`COMParator[:STATe] ON|OFF|1|0`	Comparator on/off (§4.2). Query returns NR1. Example: `COMP ON`.
`COMParator:MODE ATOLerance|PTOLerance|SEQuence`	Limit mode (§4.7.2): ATOLerance = absolute tolerance, PTOLerance = percent tolerance, SEQuence = sequential/raw-value mode. Query returns ATOL/PTOL/SEQ. Example: `COMP:MODE ATOL`.
`COMParator:TOLerance:NOMinal <value>`	Nominal value for tolerance-mode limits (valid only in ATOLerance/PTOLerance mode). Query returns the value. Example: `COMP:TOL:NOM 100E-12` (100pF).
`COMParator:TOLerance:BIN<n> <lo>,<hi>`	High/low limits for BIN<n> (1–9) in tolerance mode. Low limit must be less than high limit. Query: `COMParator:TOLerance:BIN<n>?` → lo,hi. Example: `COMP:TOL:BIN1 -5,5`.
`COMParator:SEQuence:BIN <BIN1 lo>,<BIN1 hi>,<BIN2 hi>,…,<BIN9 hi>`	Cascading bin limits in sequential mode — each bin's high limit becomes the next bin's low limit. Query returns the full list. Example: `COMP:SEQ:BIN 10,20,30,40,50`.
`COMParator:SLIMit <lo>,<hi>`	Secondary-parameter limit pair ("2nd" row, §4.7.4). Query returns lo,hi. Example: `COMP:SLIM 0.001,0.002`.
`COMParator:Auxiliary BIN ON|OFF|1|0`	Auxiliary bin on/off (§4.7.5). Query returns NR1. Example: `COMP:ABIN ON`.
`COMParator:SWAP ON|OFF|1|0`	Swaps which parameter (primary/secondary) is sorted on the 9-bin table (§4.7.1). Query returns NR1. Example: `COMP:SWAP ON`.
`COMParator:BIN:CLEar`	Clears every limit on <Limit Table Setup>. Example: `COMP:BIN:CLE`.
`COMParator:BIN:COUNt[:STATe] ON|OFF|1|0`	Bin-count accumulation on/off (§4.3). Query returns NR1. Example: `COMP:BIN:COUN ON`.
`COMParator:BIN:COUNt:DATA?`	Returns the current counts: `<BIN1>,…,<BIN9>,<OUT>,<AUX>`, all NR1.
`COMParator:BIN:COUNt:CLEar`	Zeroes all bin counts. Example: `COMP:BIN:COUN:CLE`.

8.11 DCR subsystem

Command	Details
`DCR:LEVel <value>|MIN|MAX`	DC resistance test level. TH2830 is fixed at 1V (this command has no effect); TH2832/TH2832D: MIN = 50mV, MAX = 2V (§4.5.8). Query returns NR3. Example: `DCR:LEV MIN`.
`DCR:POL ALT`	DCR polarity (§4.5.6) — alternating +/− test voltage, the only mode currently implemented. Query returns ALT. Example: `DCR:POL ALT`.
`DCR:RANGe <value>`	DCR range, Ω/kΩ. Query values: 1, 3, 10, 30, 100, 300, 1000, 3000, 10000, 30000, 100000. Example: `DCR:RANG 1KOHM`.
`DCR:RANGe:AUTO ON|OFF|1|0`	Auto-range on/off for DCR. Query returns NR1. Example: `DCR:RANG:AUTO ON`.

8.12 Mass MEMory subsystem

Command	Details
`MMEMory:LOAD:STATe <n>`	Loads setup file <n> (1–40, NR1 — §5.2.3). Example: `MMEM:LOAD:STAT 1`.
`MMEMory:STORe:STATe <n>[,"<name>"]`	Saves the current setup to file <n> (1–40), optionally under an ASCII name up to 16 characters; omitting the name uses the default (§5.2.2). Example: `MMEM:STOR:STAT 1,"Resistor meas"`.

8.13 IEEE-488.2 common commands

Command	Details
`*IDN?`	Returns `<manufacturer>,<model>,<firmware>` (e.g. Tonghui, TH2830, VER1.0.0).
`*RST`	Resets the instrument to its power-on state. Example: `*RST`.
`*CLS`	Clears the Standard Event Status register and Service Request Status register.
`*TRG`	Triggers a measurement and places the result in the output buffer.
`*TST?`	Runs the internal self-test; returns the sum of all outstanding error codes as NR1 — 0 if none.
`*OPC` / `*OPC?`	`*OPC` sets the OPC bit of the Standard Event Status register once all pending operations complete. `*OPC?` returns ASCII "1" at that point.
`*ESE <value>` / `*ESE?`	Sets/reads the Standard Event Status *Enable* register (NR1, bit-weighted — see §8.13.1).
`*ESR?`	Reads and clears the Standard Event Status register (NR1, same bit layout as §8.13.1).
`*SRE <value>` / `*SRE?`	Sets/reads the Service Request Enable register (NR1, bit-weighted — see §8.13.2).
`*STB?`	Reads the Status Byte register without clearing it (same bit layout as §8.13.2).

8.13.1 Standard Event Status register bits (*ESE / *ESR?)

Bit	Meaning
7	Power On (PON)
6	User Request (URQ)
5	Command Error (CME)
4	Execution Error (EXE)
3	Device-Dependent Error (DDE)
2	Query Error (QYE)
1	Request Control (RQC)
0	Operation Complete (OPC)

8.13.2 Status Byte register bits (*SRE / *STB?)

Bit	Meaning
7	Operation Status Register summary
6	RQS — Request Service
5	Standard Event Status Register summary
4	MAV — Message Available
3–0	Always 0

> **NOTE**
>
> Two subsystem names (`INITiate` , `ABORt`) appear in the command-subsystem index but have no published syntax — treat them as reserved rather than assuming a particular behaviour. Contact Techmize for a definitive command set if your application depends on an exact edge case.

CHAPTER 9

Handler Interface (Optional)

The HANDLER interface outputs bin-sort and status signals to automatic handling/sorting equipment. It is standard on TH2830/TH2832 and optional on TH2832D (§3.2); confirm the interface board is fitted before wiring it up.

9.1 Technical description

Item	Spec
Output signals	Active-low, open-collector, opto-isolated
Comparator output	Bin-sort result (§4.2, §4.7) — corresponds to BIN1–BIN9, AUX and OUT
List-sweep output	Per-point IN/OUT plus an overall pass/fail across all compared points
Input signals	Opto-isolated; external trigger (positive edge, ≥1 µs pulse) and key-lock

9.2 Signal groups

- **Comparison outputs:** /BIN1–/BIN9, /AUX, /OUT, /PHI (primary reading above the high limit), /PLO (primary reading below the low limit), /SREJ (secondary parameter out of range).
- **Control outputs:** /INDEX (analog test finished — safe to swap the DUT), /EOM (test and comparison both complete, bin outputs valid), /ALARM (momentary power-supply interruption detected).
- **Control inputs:** /EXT.TRIG (external trigger), /Keylock (front-panel key lock).

9.3 Connector pinout

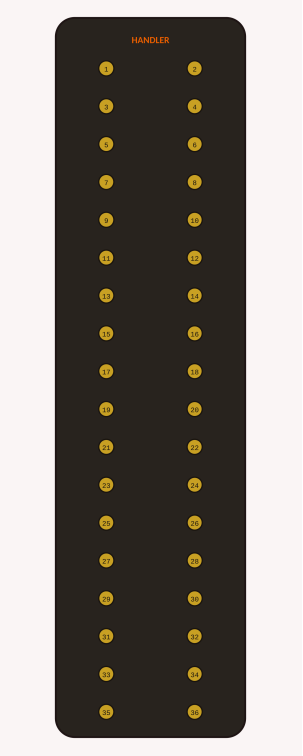

HANDLER connector, rear view

Pin	Signal	Description
1–9	/BIN1–/BIN9	Bin-sorted result outputs (open-collector)
10	/OUT	Out-of-tolerance/reject output
11	/AUX	Auxiliary bin output
12–13	/EXT.TRIG	External trigger input (positive-edge pulse)
14–15	EXT.DCV2	External DC supply for /EXT.TRIG, /Keylock, /ALARM, /INDEX, /EOM
16–18	+5V	Internal +5V (use of the internal supply is discouraged — keep load <0.3A and wiring away from noise sources)

Connector pinout (continued)

Pin	Signal	Description
19	/PHI	Primary result above the BIN1–9 high limit
20	/PLO	Primary result below the BIN1–9 low limit
21	/SREJ	Secondary result outside its high/low limit
22–24	NC	Not connected
25	/KEY LOCK	Locks front-panel keys while asserted
26	NC	Not connected
27–28	EXT.DCV1	External pull-up supply for /BIN1–9, /AUX, /OUT, /PHI, /PLO, /SREJ
29	/ALARM	Asserted when a momentary loss of supply power is detected
30	/INDEX	Asserted when the analog test finishes
31	/EOM	End-of-measurement: test + comparison complete, bin outputs valid
32–33	COM2	Ground reference for EXT.DCV2
34–36	COM1	Ground reference for EXT.DCV1

In list-sweep mode, pins 1–10 instead report per-point IN/OUT flags and pin 11 reports "at least one point failed."

9.4 Electrical features

Signal group	Output LOW	Output HIGH	Max. current
Comparison signals	≤ 0.5 V	+5 to +24 V	6 mA
Control signals	≤ 0.5 V	+5 to +24 V	5 mA

Every DC isolated output (pins 1–16 of the HANDLER connector) is an open-collector output through an opto-coupler. Each line's output voltage is set by a pull-up resistor on the HANDLER interface board; the pull-up connects either to the instrument's internal +5 V supply or, via a jumper, to an externally-supplied voltage (EXT.DCV1 for the comparison-signal group, EXT.DCV2 for the control-signal group). The input stage for /EXT.TRIG and /Keylock is likewise opto-isolated, with its own pull-up (820 Ω) selectable between internal +5 V and EXT.DCV2. See §9.4.1 for the circuit diagrams.

9.4.1 HANDLER interface board circuits

Pull-up/pull-down jumper positions (JP1–JP6) are set at the factory; do not change them without confirming the external supply voltage and polarity on EXT.DCV1/EXT.DCV2 first — an incorrectly-set jumper can damage the interface board or the connected handler equipment.

Comparison-result signal output circuit — /OUT, /BIN1–/BIN9, /AUX, /PHI, /PLO, /SREJ (JP1–JP3)

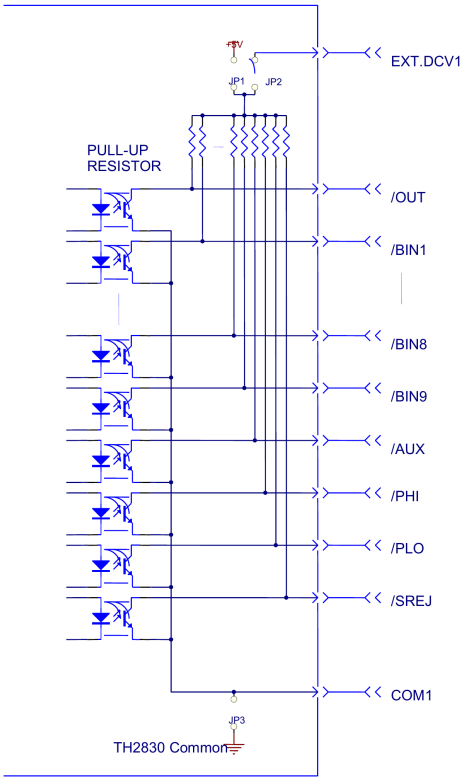

Comparison output circuit — open-collector opto-coupler per signal, common pull-up selected by JP1/JP2, ground reference COM1 selected by JP3

Control signal output circuit — /ALARM, /INDEX, /EOM (JP4–JP6)

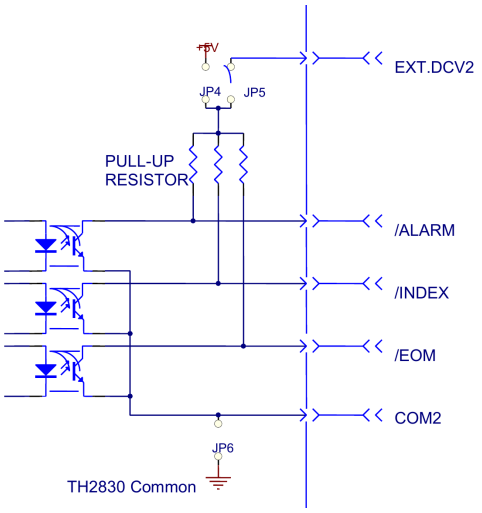

Control output circuit — common pull-up selected by JP4/JP5, ground reference COM2 selected by JP6

Control signal input circuit — /EXT.TRIG, /Keylock (JP4/JP5, shared with the output circuit above)

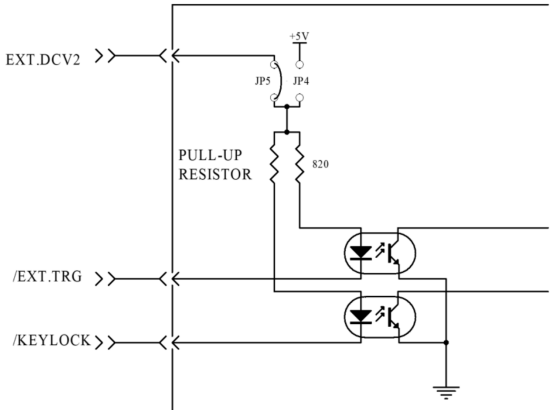

Control input circuit — opto-isolated inputs, 820 Ω pull-up selectable between internal +5 V and EXT.DCV2

9.5 Operation sequence

Per test cycle: trigger → delay (T2) → analog measurement → **/INDEX** asserts the instant the analog measurement finishes (safe to remove/insert the next DUT, but bin outputs are not yet valid) → comparison and display processing → **/EOM** asserts once the bin outputs are valid and stable → the handler reads the bin state → the instrument waits (T3) before accepting the next trigger.

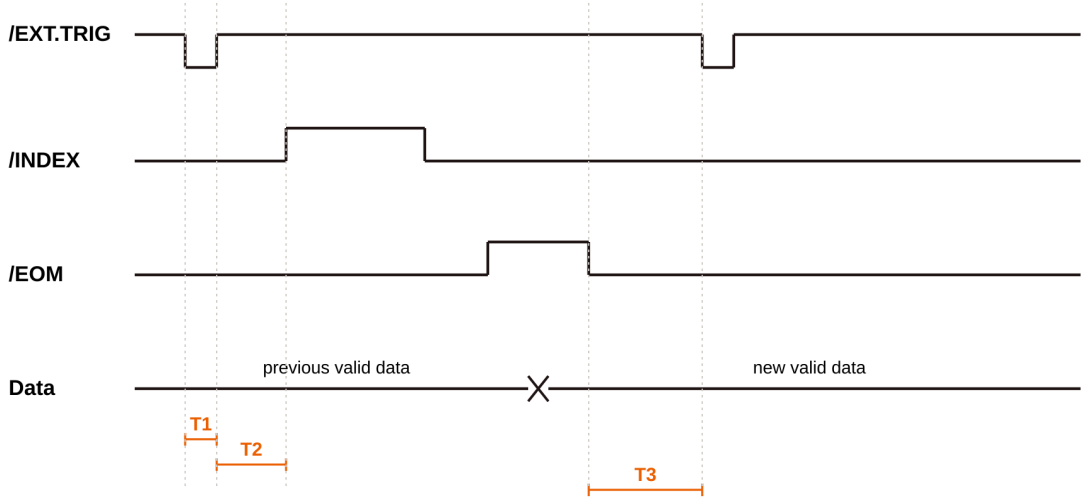

/EXT.TRIG, /INDEX, /EOM and Data timing across two successive measurements

Timing	Min.	Max.
T1 — trigger pulse width	1 µs	—
T2 — measurement-start delay	200 µs	display time (see below) + 200 µs
T3 — post-/EOM trigger wait	0 µs	—

Typical comparison time: ≈1 ms. Typical display time (feeds into T2's maximum, above) depends on which page is active: <Measurement Display> ≈8 ms; <Bin No. Display> ≈5 ms; <Bin Count Display> ≈0.5 ms.

9.5.1 Analog measurement time

Typical analog measurement time by speed and test frequency (DC bias off):

Speed	20 Hz	100 Hz	1 kHz	10 kHz	100 kHz
Fast	380 ms	100 ms	20 ms	7.7 ms	5.7 ms
Medium	380 ms	180 ms	110 ms	92 ms	89 ms
Slow	480 ms	300 ms	240 ms	230 ms	220 ms

Figures are per-reading analog measurement time only — comparison (≈1 ms) and display time (above) are separate and add to T2's maximum. Medium and Fast speeds slow down at frequencies below 10 kHz, as shown. No separate figure is published exactly at the TH2832/TH2832D 200/300 kHz ceiling; measurement time on this engine continues to flatten above 100 kHz (unchanged, to one decimal place, through 1 MHz), so no significant further change is expected there.

9.5.2 List-sweep timing

Signal *meaning* differs from bin-comparison mode (§9.2) — see §9.3's list-sweep note — but the T1/T2/T3 structure above still applies, with two sweep-level modes:

- **SEQ (continuous) sweep:** /INDEX asserts once, when the analog measurement at the *last* sweep point finishes; /EOM asserts once, after the entire sweep's measurements and comparisons are all complete and valid.
- **STEP sweep:** /INDEX and /EOM each assert once *per sweep point* — i.e. after every individual point's measurement (/INDEX) and comparison (/EOM).

Setup time (including correction on/off switching) precedes T2 in list-sweep mode; typical comparison+display time is ≈4.5 ms. Otherwise T1/T2/T3 are as defined in the table above.

9.6 Setting up bin sorting

1. Open <Limit Table Setup> (§4.7); enter the nominal value and bin high/low limits.
2. Set COMP to **ON**.
3. Open <Bin No. Display> or <Bin Count Display> (§4.2, §4.3) to run production testing; DUT and auxiliary counts are shown on the count page.

For list-sweep comparison: open <List Sweep Setup> (§4.8), set sweep mode/points/limits, then run from <List Sweep Display> (§4.4).

For fastest cycle time in a sorting application: lock the range to the expected value instead of AUTO (§4.1.2), turn off the Vm/Im signal monitors (§4.5.5), and run testing from the <Bin Count Display> page.

APPENDIX

Terms, Symbols & Quick Reference

A.1 Terms and symbols

Symbol	Meaning	Symbol	Meaning
C	Capacitance	D	Dissipation factor
L	Inductance	Q	Quality factor
R	Resistance	θ	Phase angle
Z	Impedance	DCR	DC resistance
Y	Admittance	X	Reactance
G	Conductance	B	Susceptance
Hcur / Hpot	Current-source high / voltage-sense high test terminal	Lcur / Lpot	Current-source low / voltage-sense low test terminal
Cp / Cs	Capacitance, parallel / series equivalent circuit	Lp / Ls	Inductance, parallel / series equivalent circuit

A.2 Front-panel key quick reference

Key	Function
DISP	Opens the measurement display pages (§4.1–§4.4)
SETUP	1st press: measurement setup pages (§4.5–§4.9). 2nd press: <System Setup> (§5.1)
TRIG	Manual trigger (trigger mode = MAN, §4.5.1)
BIAS	Enables/disables DC bias output (§4.1.5)
LOCK	Locks/unlocks the front panel
RESET	Stops an automatic transformer sweep in progress

A.3 Common remote commands

Task	Command
Identify the instrument	`*IDN?`
Reset to power-on state	`*RST`
Set the measured parameter	`FUNCtion:IMPedance <fn>` (§8.5.1 for the enum)
Set frequency / level	`FREQuency <value>` · `VOLTage <value>`
Trigger and read a result	`TRIGger:SOURce BUS` then `TRIGger` and `FETCh?`
Run open/short correction	`CORRection:OPEN` · `CORRection:SHORt`
Save/load a setup file	`MMEMory:STORe:STATe` · `MMEMory:LOAD:STATe`

See Chapter 8 for the full command reference.

A.4 Contact, warranty and support

Warranty: two years from delivery, per §1.8. For service, calibration, accessories or the items flagged for confirmation throughout this manual (extended-frequency accuracy data, REACH status, and the open parameter conflicts listed in the companion Open Items document), contact Techmize using the details below.

Techmize Electronic GmbH

Office 125–126, Regus
Carl-Zeiss-Ring 15a, 85737 Ismaning,
Germany
An international subsidiary of Changzhou
Tonghui Electronic Co., Ltd. (China)

Contact

Mobile: +49 171 4981898
Email: sales@techmize-instruments.eu
Web: www.techmize-instruments.eu

Registration

Managing Director: Haohua Zhao
Register Court: Amtsgericht München
HRB 312530 · VAT ID DE463170824